HERBERHOLZ
INDUSTRIAL VALVES

BUTTERFLY VALVE DAMPERS

DN 50 - DN 1200
TYPE **HRD / HRA**

CASTED BODY

Temperature max. 550°C

Industrial burners

Industrial furnaces

Steel industry

MADE IN GERMANY

info@herberholz.com - www.herberholz.com

TECHNICAL DATA

HERBERHOLZ
INDUSTRIAL VALVES

DN 50 - DN 1200 TYPE **HRD / HRA** SERIES **016 / 019**

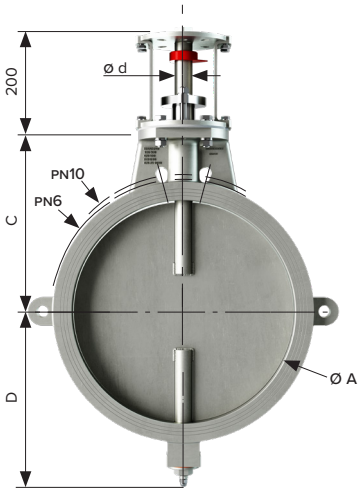

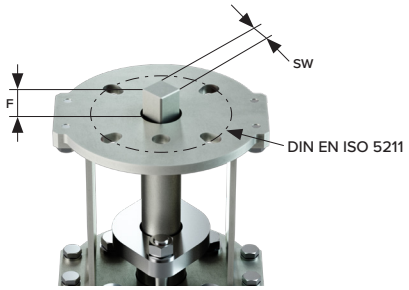

MOUNTING BRACKET
1.0037, 1.4301

PACKING GLAND
1.0037, 1.4571

SHAFT SEALING
Graphite, Viton, NBR

SHAFT
1.4021, 1.4301, 1.4571

DISC
EN-JL-1040, EN-JS 1049, 1.0037
1.4301, 1.4410, 1.4571, 1.4581

BODY
EN-JL-1040, EN-JS 1030, G-AISi

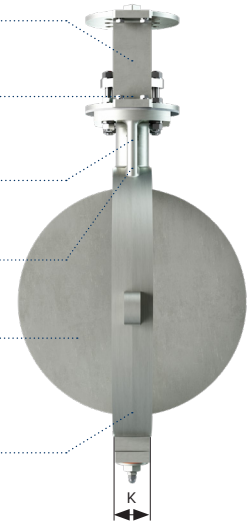

DN	ø A	C	D	SW	F	K	DIN EN ISO 5211	ø d	Weight [kg]	TORQUE NM	
										HRD	HRA
50	51	125	75	11	17	43	F07 / F10	14	11	8	14
65	66	135	85	11	17	46	F07 / F10	14	12	12	18
80	81	140	93	11	17	46	F07 / F10	14	13	15	24
100	101	149	120	11	17	52	F07 / F10	16	14	20	28
125	126	165	133	11	17	56	F07 / F10	16	17	25	30
150	151	185	153	14	17	56	F07 / F10	20	20	30	45
200	201	215	180	14	17	60	F07 / F10	20	32	40	65
250	251	240	212	17	19	68	F07 / F10	24	40	60	75
300	301	265	243	22	23	78	F07 / F10	30	51	80	90
350	340	300	270	22	23	78	F07 / F10	30	59	100	125
400	390	335	300	22	23	80	F07 / F10	30	83	110	145
(450)	440	356	313	22	23	65	F07 / F10	30	57	110	145
500	490	400	340	27	27	80	F12	40	117	130	210
600	590	460	390	27	27	80	F12	40	165	160	315
700	690	520	440	27	27	80	F12	40	210	180	450
800	790	583	500	27	27	90	F12	40	275	220	600
900	890	630	550	36	36	100	F12	50	361	250	650
1000	990	685	610	36	36	110	F12	50	465	300	700
1200	1190	800	720	36	36	130	F12	50	585	350	800

© Herberholz GmbH, 09/2022

Technical data changes and developments reserved.

Data may differ depending on product specification.

info@herberholz.com - www.herberholz.com

SEAL RING

HERBERHOLZ
INDUSTRIAL VALVES

DN 50 - DN 1200 TYPE **HRD / HRA** SERIES **016 / 019**

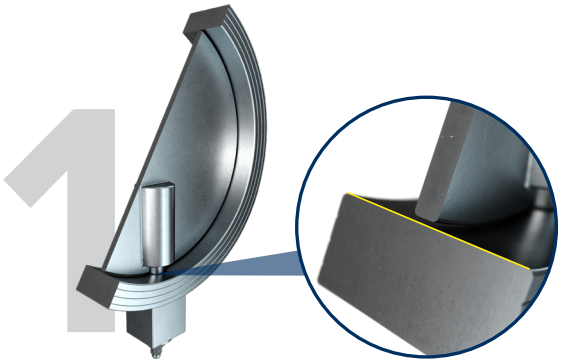

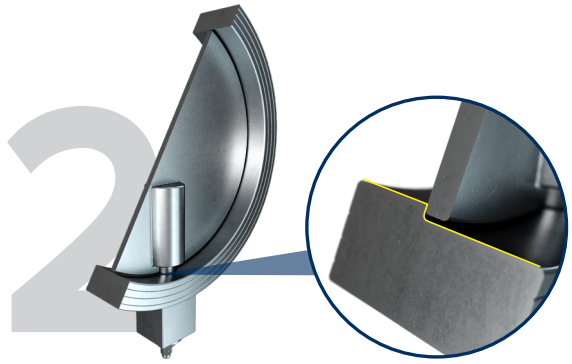

1. WITHOUT SEAT
Leakage approx. 1% of area equivalent

2. METALLIC TRAVEL STOP
Leakage approx. 0,5% of area equivalent

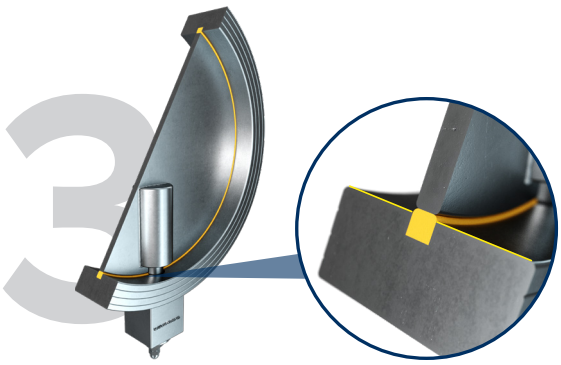

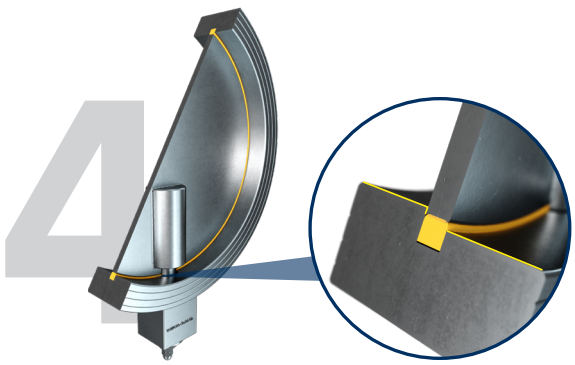

3. WITH LINING ELEMENT
Leakage approx. 0,3% of area equivalent

4. METALLIC TRAVEL STOP WITH LINING ELEMENT
Leakage approx. 0,1% of area equivalent

© Herberholz GmbH, 09/2022

Technical data changes and developments reserved.

info@herberholz.com - www.herberholz.com